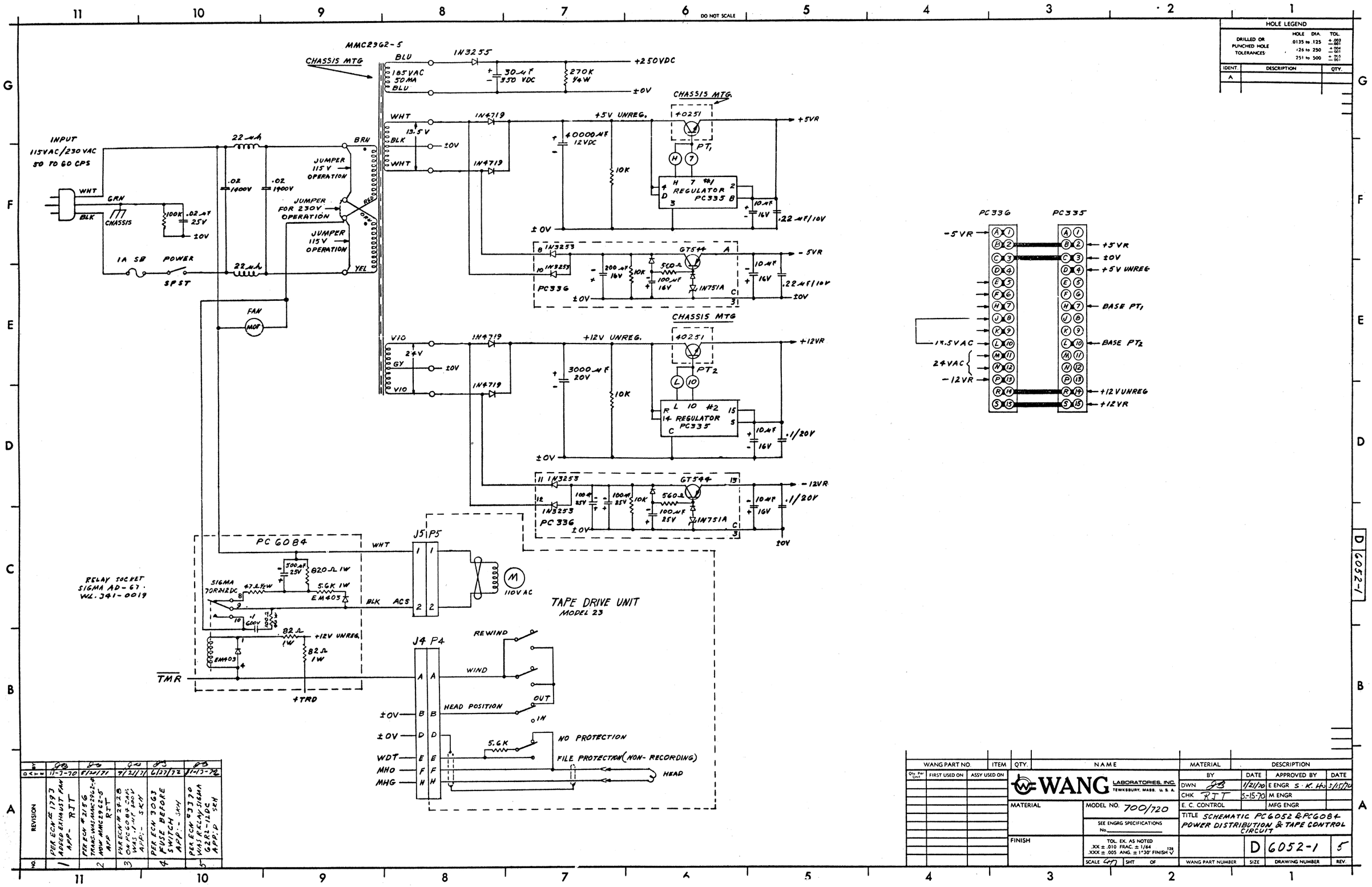

NO.	REVISION	BY	DATE
1	PER ECN # 1793 ADDED EXHAUST FAN APP- RJT	JB	11-3-70
2	PER ECN # 2156 TRANS. WAS MMC2962-4 NOW MMC2962-5 APP RJT	JB	5/20/71
3	PER ECN # 2428 ON PC6084 CAP. WAS .1µF 400V APP:- SKH	JB	9/21/71
4	PER ECN 3063 FUSE BEFORE SWITCH APP:- SKH	JB	6/27/72
5	PER ECN # 3370 WAS RELAY SIGMA 62R2-1LDC APP:D SKH	JB	11-13-72

WANG PART NO.	ITEM	QTY.	NAME	MATERIAL	DESCRIPTION
Qty. Per Unit	FIRST USED ON	ASSY USED ON			

WANG LABORATORIES, INC. TEWKSBURY, MASS. U.S.A.

	BY	DATE	APPROVED BY	DATE
DWN	JB	1/21/70	E ENGR S. K. Ho	5/15/70
CHK	RJT	5-15-70	M ENGR	
E. C. CONTROL			MFG ENGR	

MATERIAL

MODEL NO. 700/720

SEE ENGRG SPECIFICATIONS No.

FINISH

TOL. EX. AS NOTED .XX ± .010 FRAC. ± 1/64 .XXX ± .005 ANG. ± 1°30' FINISH 128

SCALE 4/7 SHT OF

TITLE SCHEMATIC PC6052 & PC6084 POWER DISTRIBUTION & TAPE CONTROL CIRCUIT

WANG PART NUMBER	SIZE	DRAWING NUMBER	REV.
	D	6052-1	5